Ortronics
VERTICAL CONTROL BRACKET
Part No. VCB-93-6H

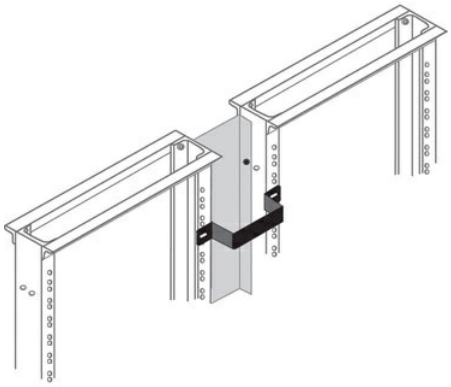

Vertical control brackets attach to equipment racks to provide secure backside cable containment; Legrand recommends using four brackets on an 84" rack.

Features & Benefits

- Use with 6"" vertical organizers for double-sided management
- Constructed of steel
- Includes 12-24 mounting hardware
- Sold individually

Specifications

General Info

Product Line	Ortronics	UPC Number	662875559184
Country Of Origin	United States	Application Sector	Commercial/Industrial

Dimensions

Product Width US	8.56 in	Product Depth US	6.0 in
Product Height US	1.0 in		

Additional Information

RoHS Compliant	Yes