Pass and Seymour

Pin & Sleeve Watertight 30A 125V/250V Receptacle

Part No. PS430R12W

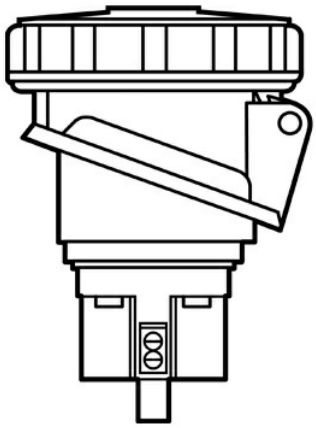

3-Pole,4-Wire, Pin and Sleeve Receptacle. 30A, 125/250V.

Features & Benefits

Legrand Pin & Sleeve products provide installation ease, enduring performance in harsh conditions, and guaranteed IEC 309 compatibility.

Nylon construction for highimpact and corrosion resistance.

Locking ring with an integral neoprene gasket provides watertight seal when plug and connector/receptacle are mated.

Combination-head screws for added convenience and quick installation.

Cover with integral neoprene gasket provides watertight seal.

Arrives ready to wire, with cord grip open and cable-ready. Terminal screws come backed out and ready to wire. Front and back body require no disassembly prior to assembly.

Nickel-plated brass pins provide extracorrosion resistance without sacrificing electrical conductivity.

Natural-rubber grommets provide watertight protection at cable entry.

Revolutionary, hinged cord grip for durable performance and ease of installation.

Specifications

General Info

Product Line	Pass & Seymour	Color	Gray
UPC Number	785007621204	Country Of Origin	United States
Application Sector	Industrial	Standard	UL Listed

Dimensions

Product Width US	3.72 in	Product Height US	4.3 in
Product Length US	4.5 in		

Listing Agencies / 3rd Party Agencies

cULus ListingNumber	151348	cULus Listed	Yes

Technical Information

Number of Wires	4	Amperage	30 A
Number of Poles	3-Way	Voltage	125.0 V