Cablofil
Flat Cover Connectors Strap-Style
Part No. P630472

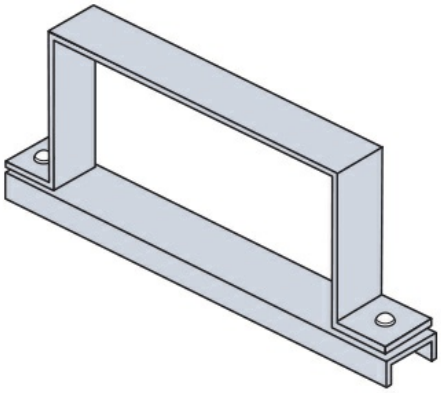

The aluminum I-beam design of ITray is perfect for industrial installations with large diameter cables in long span situations, minimizing total tray width and creating a smooth transition between straight sections and fittings. A structural offset in the sidewall creates strong, mid-span splices that need fewer supports. Each splice snaps in place and stays without holding, Additionally, only four bolts are needed for each splice reducing hardware needs by 50%. These features allow Itray to be installed up to 30% faster than standard tray.

Features & Benefits

For use with indoor, outdoor, or vertical flat covers.

Top and bottom pieces are 1 1/2'' wide.

Specifications

General Info

Product Line	Cablofil	Finish	GC
UPC Number	800388529854	Country Of Origin	Mexico

Dimensions

Product Width US	21.0 in	Product Weight US	1.711 lb
Product Volume US	0.123 cu ft	Product Depth US	1.5 in
Product Height US	6.75 in		

Buy American Act Compliance

BAA	Yes