Cablofil
Standard Splice
Part No. P603458

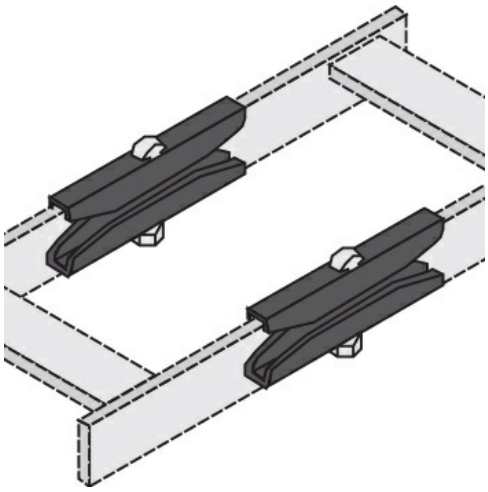

For extremely corrosive applications we offer a full line of straight sections, fittings, covers and mounting accessories in polyester and vinylester fiberglass. Rail heights are available in 4"" and 6"" and widths are available up to 36"".

Features & Benefits

All splices are supplied in pairs.

Type 316 stainless steel fasteners are standard on stainless steel systems, but are available as an option on all aluminum and steel systems.

Bonding jumpers are required for all expansion splice plates, adjustable connectors, and tray discontinuities.

Geomet fasteners are standard on aluminum and steel cable tray systems.

Sufficient connector pairs with fasteners are automatically included with each shipment of straight sections and fittings. Extras for field cuts or spares must be ordered separately.

Specifications

General Info

Product Line	Cablofil	Finish	GC
UPC Number	800388526105	Country Of Origin	Mexico

Dimensions

Product Width US	1.3 in	Product Weight US	8.76 lb
Product Volume US	0.105 cu ft	Product Depth US	16.0 in
Product Height US	8.75 in		

Buy American Act Compliance

BAA	Yes