Cablofil
Wall Penetration Sleeve
Part No. P600950

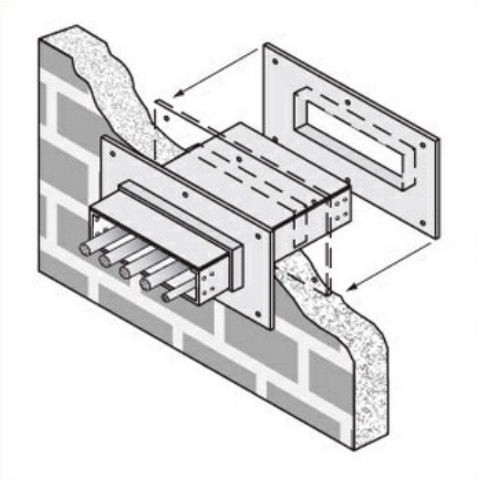

Choose from an extensive selection of metallic ladder tray with a variety of rung and bottom styles to choose from. Finishes include steel, 304L and 316L stainless steel to meet the needs of any application. Rail heights range from 4" to 7" and width sizes are available up to 36".

Features & Benefits

UL listed heavy gage steel construction

Specifications

General Info

Product Line	Cablofil	Finish	Pre-Galvanized
Country Of Origin	Mexico		

Dimensions

Product Weight US	67.17 lb