Cablofil
SB-5A-RX12-1206 AL 5H HRED X 12R 1206W
Part No. P321277

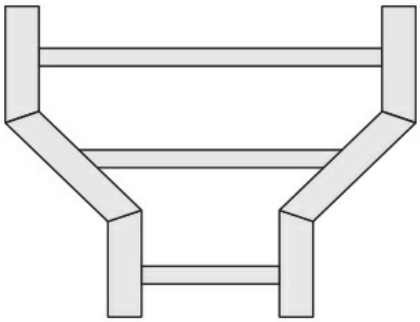

Choose from an extensive selection of metallic ladder tray with a variety of rung and bottom styles to choose from. Finishes include steel, 304L and 316L stainless steel to meet the needs of any application. Rail heights range from 4"" to 7"" and width sizes are available up to 36"".

Features & Benefits

Includes splices and hardware

Specifications

General Info

Product Line	Cablofil	Finish	AL
UPC Number	800388137479	Country Of Origin	Mexico

Dimensions

Product Width US	42.0 in	Product Weight US	14.501 lb
Product Volume US	4.586 cu ft	Product Depth US	36.0 in
Product Height US	5.241 in		

Buy American Act Compliance

BAA	Yes