Cablofil
Cable Dropout
Part No. P088065

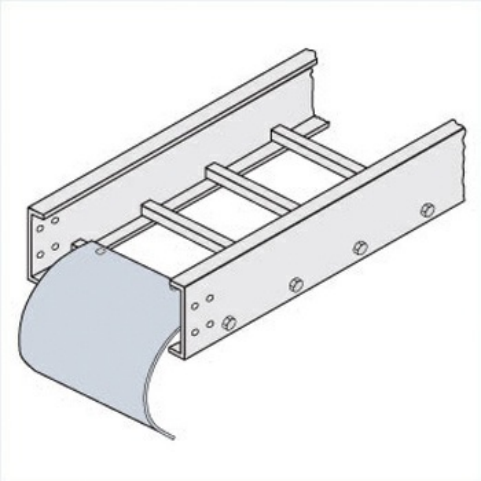

Choose from an extensive selection of metallic ladder tray with a variety of rung and bottom styles to choose from. Finishes include steel, 304L and 316L stainless steel to meet the needs of any application. Rail heights range from 4" to 7" and width sizes are available up to 36".

Features & Benefits

Smooth radius for cable drops

Specifications

General Info

Product Line	Cablofil	Finish	GS
UPC Number	800388518933	Country Of Origin	Mexico

Dimensions

Product Width US	5.188 in	Product Weight US	2.18 lb
Product Volume US	0.184 cu ft	Product Depth US	7.0 in
Product Height US	8.749 in		

Buy American Act Compliance

BAA	Yes