Cablofil
Flat Cover Connectors Channel-Style
Part No. P086326

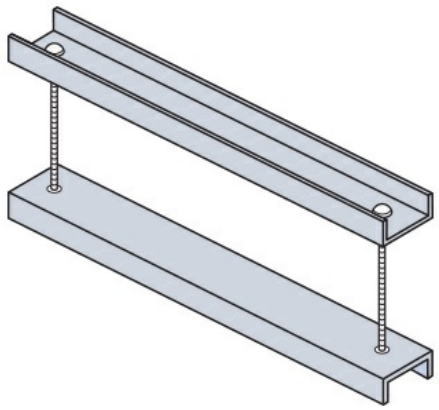

The aluminum I-beam design of ITray is perfect for industrial installations with large diameter cables in long span situations, minimizing total tray width and creating a smooth transition between straight sections and fittings. A structural offset in the sidewall creates strong, mid-span splices that need fewer supports. Each splice snaps in place and stays without holding, Additionally, only four bolts are needed for each splice reducing hardware needs by 50%. These features allow Itray to be installed up to 30% faster than standard tray.

Features & Benefits

For use with indoor, outdoor, or vertical flat covers.

Top and bottom pieces are 1 1/2'' wide.

Specifications

General Info

Product Line	Cablofil	Finish	GS
UPC Number	800388517417	Country Of Origin	Mexico

Dimensions

Product Width US	14.0 in	Product Weight US	1.549 lb
Product Volume US	0.026 cu ft	Product Depth US	1.5 in
Product Height US	2.11 in		

Buy American Act Compliance

BAA	Yes