Cablofil
SC-1E53-0010-06 G 5"H SOLID TRAY 10'L 06"W
Part No. P013079

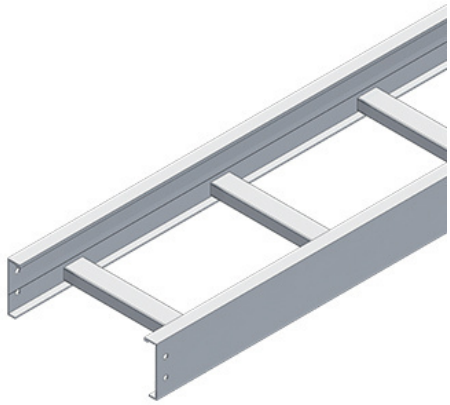

Choose from an extensive selection of metallic ladder tray with a variety of rung and bottom styles to choose from. Rail heights range from 4"" to 7"" and width sizes are available up to 36"".

Features & Benefits

Material: Commercial Quality Steel / ASTM A-1008 / A-1011

Finish: Ho-dip Galvanized after Fabrication / ASTM A-123

Bottom: Ldr: 1'' wide + rung SC: Solid Corrugated VC: Vented Corrugated

Construction: Welded

Tray Design: Tray construction and markings are per the latest edition of NEMA Standards Publication VE1, CSA C22.2 No. 126

Tray Grounding Capability: Classified as an equipment grounding conductor per NEC 392.60

Specifications

General Info

Product Line	Cablofil	Finish	Hot Dipped Galvanized
UPC Number	800388262393	Country Of Origin	Mexico

Dimensions

Product Width US	6.0 in	Product Weight US	54.662 lb
Product Volume US	2.083 cu ft	Product Depth US	120.0 in
Product Height US	5.0 in		

Buy American Act Compliance

BAA	Yes