Cablofil
4" Steel Straight Sections
Part No. P009120

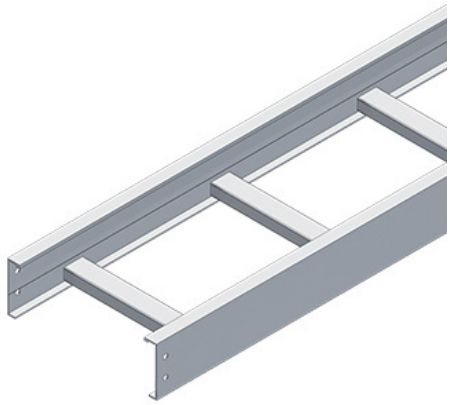

Choose from an extensive selection of metallic ladder tray with a variety of rung and bottom styles to choose from. Rail heights range from 4"" to 7"" and width sizes are available up to 36"".

Features & Benefits

Material: Commercial Quality Steel / ASTM A-1008 / A-1011

Finish: Ho-dip Galvanized after Fabrication / ASTM A-123

Bottom: Ldr: 1'' wide + rung SC: Solid Corrugated VC: Vented Corrugated

Construction: Welded

Tray Design: Tray construction and markings are per the latest edition of NEMA Standards Publication VE1, CSA C22.2 No. 126

Tray Grounding Capability: Classified as an equipment grounding conductor per NEC 392.60

Specifications

General Info

Product Line	Cablofil	Finish	GC
UPC Number	800388271876	Country Of Origin	Mexico

Dimensions

Product Width US	18.0 in	Product Weight US	115.492 lb
Product Volume US	10.0 cu ft	Product Depth US	240.0 in
Product Height US	4.0 in		

Buy American Act Compliance

BAA	Yes