Cablofil
BRACKET SPACER-HOT DIPPED (10 PCS) [557193]
Part No. 557193

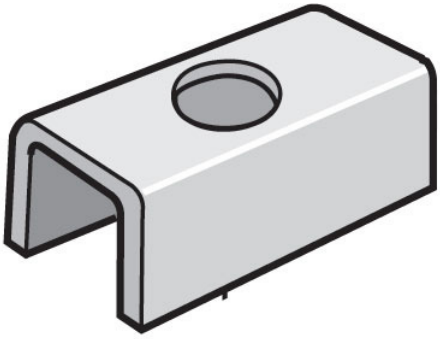

Cablofil Wiremesh Cable Tray concept based upon performance, safety and economy; three qualities which make Cablofil Wiremesh Cable Tray system preferred by installers. Cablofil adapts to the most complex configurations, and its structure gives maximum strength for minimum weight. The ease of creating fittings, carried out on site, as well as the wide range of unique and universal accessories gives complete freedom in routing combined with exceptionally fast installation.

Features & Benefits

- prevents bracket compression
- for use with the CS and CSC brackets

Specifications

General Info

Product Line	Cablofil	Finish	Hot Dipped Galvanized after Fabrication
UPC Number	800388013483	Country Of Origin	France
Application Sector	Commercial, Industrial	Standard	UL Classified
Type	Supports		

Dimensions

Product Width US	5.75 in	Product Weight US	0.351 lb
Product Volume US	0.01 cu ft	Product Depth US	6.0 in
Product Height US	0.5 in		

Buy American Act Compliance

BAA	Yes